Lab Report 4: Mesh Analysis Methods

1. Mesh Analysis and Circuit Verification

Mesh Analysis and Circuit Verification

The method for calculating loop currents and branch voltages in the circuit was verified using mesh analysis. This technique operates by applying Kirchhoff's Voltage Law (KVL) around each closed loop (or "mesh") within the circuit. Instead of solving for node potentials, we define mesh currents for each window-like loop and write equations representing the sum of voltages around those paths.

By expressing the voltage drop across each resistor as the product of the resistance and the net mesh current passing through it we generate a system of linear equations. Solving this system allows us to determine the individual mesh currents, which can then be used to find any branch current or component voltage drop. This method is particularly efficient for planar circuits and provides a direct way to compare theoretical loop behavior with experimental measurements taken in the lab

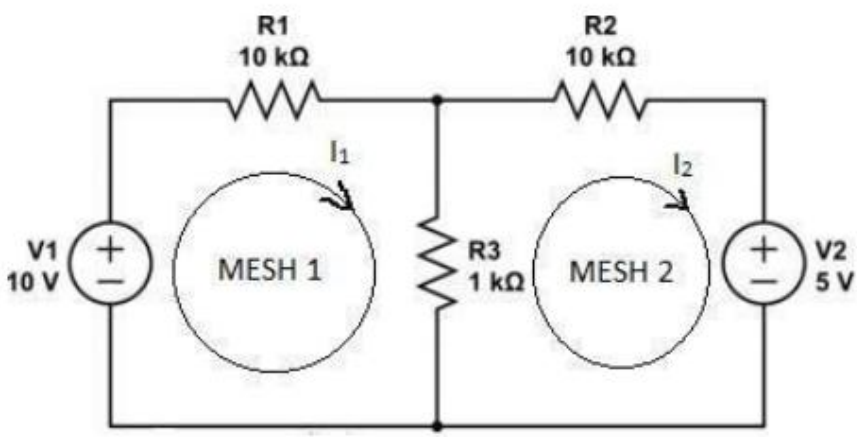

Figure 4.1

The circuit being analyzed

The theoretical results were calculated by hand and simulated in Circuit Lab

For the hand calculated results:

A. I_2 in terms of I_1, R_2, R_3. I_1 gets absorbed in when solving for I_2. The hand calculations are in the next page.

$$I_2 = \frac{\left(10\frac{R_3}{R_2+R_3} - 5\right)}{\left(-\frac{R_3^2}{R_2+R_3} + (R_2+R_3)\right)} = -375\ \mu\text{A}$$

B. Current values for I_1 and I_2

$$I_1 = \frac{I_2 R_3 + 10}{R_2 + R_3} = 875\ \mu\text{A}$$

Matrix operations can also be used.

$\mathcal{L}et$ col 1 be I_1 and col 2 be I_2, solving the system equations using matrix operations:

$$\begin{bmatrix} (R_1+R_3) & -R_3 & 10 \\ -R_3 & (R_2+R_3) & -5 \end{bmatrix} = \begin{bmatrix} 11\ \text{k}\Omega & -1\ \text{k}\Omega & 10 \\ -1\ \text{k}\Omega & 11\ \text{k}\Omega & -5 \end{bmatrix} \overset{\text{rref}}{\Longrightarrow} \begin{bmatrix} 1 & 0 & 875\ \mu\text{A} \\ 0 & 1 & -375\ \mu\text{A} \end{bmatrix}$$

For the Circuit Lab Results:

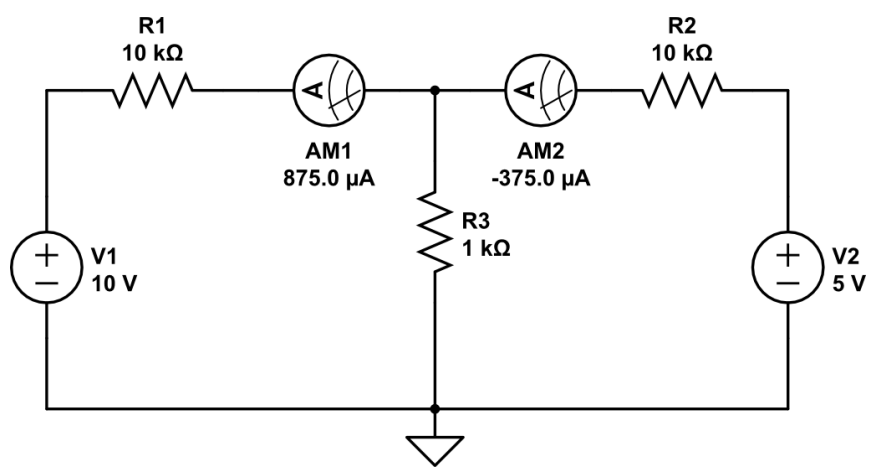

Experimental Results

The results for the experiment are in the table below

I_1	882 μA
I_2	-382.1 μA

The results closely match to the theoretical values. Discrepancy in values are due to resistor tolerances.

Therefore, mesh analysis is verified.

Nodal vs Mesh

Nodal analysis is most efficient for circuits with fewer nodes than loops or those containing many parallel branches and voltage sources; it is also the only option for non-planar circuits. Conversely, mesh analysis is preferred for planar circuits with fewer loops than nodes or those with many series components and current sources. Ultimately, the best method is the one that aligns with the specific circuit characteristics to simplify the mathematical complexity.

2. Mesh Analysis with Current-Dependent Voltage Source

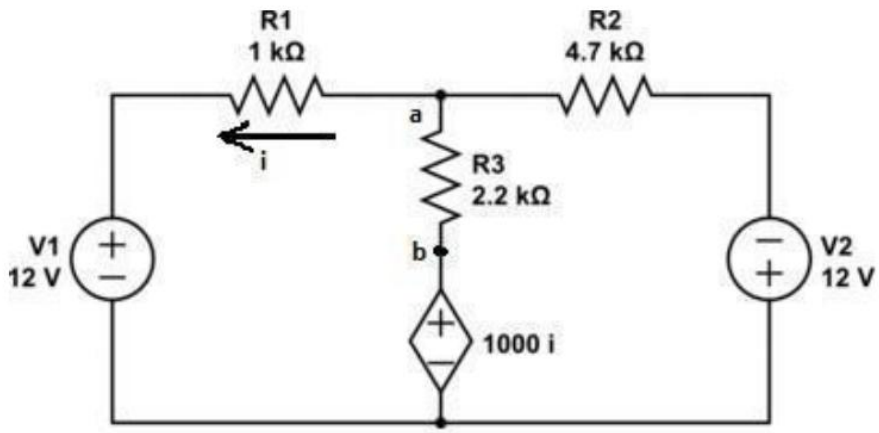

Figure 4.2

When we keep the original direction of i, but flip the polarity of the current-dependent voltage source $1000i$ we get

$$\begin{bmatrix} 4200 & -2200 & 12 \\ -3200 & 6900 & 12 \end{bmatrix} \overset{\text{rref}}{\Longrightarrow} \begin{bmatrix} 1 & 0 & 4.977\text{ mA} \\ 0 & 1 & 4.047\text{ mA} \end{bmatrix}$$

With Polarity of 1000i reversed:

$i = -I_A$

KVL A

$-12 + I_A 1K + (I_A - I_B) 2.2K - 1K i = 0$

$I_A 4.2K - I_B 2.2K = 12$

KVL B:

$1Ki + (I_B - I_A) 2.2K + I_B 4.7K - 12 = 0$

$-I_A 3.2K + I_B 6.9K = 12$

Which matches with the simulations

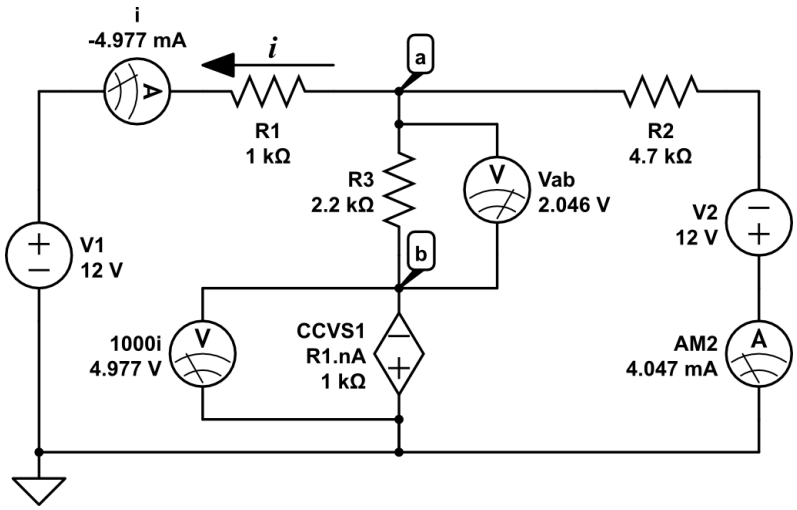

This closely matched our experimental data

i	$-5.083\ \mathrm{mA}$
$1000i$	$5\ \mathrm{V}$
V_{ab}	$1.964\ \mathrm{V}$

Therefore changing the polarity of the CCVS modifies the KVL mesh equations and changes the magnitude of the current i.